Description of a Liquid Metal Test Blanket for TASKA-M

I.N. Sviatoslavsky, M.E. Sawan, D.K. Sze

December 1983

FPA-83-6

Presented at the 10th Symp. on Fusion Engineering, Philadelphia, PA, 5-9 December 1983

FUSION POWER ASSOCIATES

2 Professional Drive, Suite 248
Gaithersburg, Maryland 20879
(301) 258-0545

1500 Engineering Drive
Madison, Wisconsin 53706
(608) 263-2308

DESCRIPTION OF A LIQUID METAL TEST BLANKET FOR TASKA-M

I.N. Sviatoslavsky, M.E. Sawan and D.K. Sze*
Fusion Power Associates, 6515 Grand Teton Plaza
Madison, WI 53719

Summary

TASKA-M is a conceptual design of a low power, low cost test reactor based on a tandem mirror without thermal barriers utilizing physics which is presently in hand, or which should be available by 1985. The main purpose of the reactor is to study plasma engineering and provide a reasonable cost test bed for qualifying materials and investigating different blanket concepts. The central cell which is nominally 4.25 m long is divided into five zones: a liquid metal test blanket module, a solid breeder test blanket module, two material test modules and a central cell shield insert. This paper describes the structural, thermal hydraulics and neutronic aspects of two liquid metal test blanket modules, one utilizing the $Li_{17}Pb_{83}$ eutectic and the other Li. Both blanket modules are designed to fit into the same slot within the central cell and will therefore be tested consecutively. Further, the blanket modules contain one of the four ICRF antennas that are needed to provide plasma heating within the central cell.

Introduction

The successful utilization of liquid metals in the fast breeder program has carried over into fusion power research and it is, therefore, not surprising that liquid metals have been serious candidates as blanket materials in fusion power reactors from the earliest days of fusion. Because of their low vapor pressure and high thermal conductivity, liquid metals are outstanding heat transfer fluids. Their stability under radiation makes them especially attractive for nuclear power applications. Fusion reactors operating on the D-T cycle must have lithium in the blanket surrounding the plasma in order to be self-sufficient with respect to tritium. The lithium can be in its elemental form, or as a eutectic or compound. The two leading liquid metal candidates are $Li_{17}Pb_{83}$ which has a melting temperature of 235°C and elemental lithium with a melting temperature of 180°C.

Liquid metal fusion reactor blankets can be either self-cooled or separately cooled. In self-cooled blankets, the liquid metal is pumped out of the reactor and goes through a heat exchanger where the energy is transfered to steam or some other medium. Separately cooled blankets require a coolant going through pipes immersed in the liquid metal within the blanket. The self-cooled blanket concept is ideally suited for tandem mirrors where the magnetic field is relatively low as is the surface wall heating. Thus, the blanket design for TASKA-M is self-cooled. Higher magnetic fields and higher surface wall heating may preclude the use of self-cooled liquid metal blankets in tokamaks, particularly on the inboard side.

There are many aspects to testing and qualification of a blanket concept for ultimate use in a power reactor. Obviously safety and environmental acceptability are extremely important. Other obvious aspects are structural, thermal, neutronic and chemical. Tests relating to safety and environmental issues need not be performed in a test reactor. However, structural, thermal, neutronic and chemical issues relating to material compatibility, corrosion, tritium permeability, containment and extraction must be performed within a test reactor because they are influenced by the neutronic environment.

Two blanket modules, one utilizing $Li_{17}Pb_{83}$ and the other Li are designed to fit in the same slot within the central cell shown in Fig. 1. The location is designated as blanket No. 1. They will be tested consecutively. Both are made of the ferritic steel HT-9 and are self-cooled once through tubular designs, with a single inlet and outlet connection. Details of the structural designs, as well as neutronic and thermal hydraulic analyses are presented in the following sections.

Structural Design

General Description

The design of the liquid metal blanket in TASKA-M draws on the experience gained in earlier tandem mirror studies such as WITAMIR [1] and TASKA [2]. Although the designs all differ slightly, they share the once-through tubular concept and all have a single inlet and outlet header.

The liquid metal blanket test module consists of rows of tubes distributed axially, running from an upper manifold to a lower manifold as shown in Fig. 2. Breeding material comes in through a horizontal header at the top, distributes axially within the upper manifold with the aid of the magnetic field, then flows through the tubes around the plasma collecting in the lower manifold and exiting through the outlet header. The inner radius is 22 cm, the axial length is 83 cm and the thickness is 45 cm for the $Li_{17}Pb_{83}$ module and 64 cm for the Li module. The structural material is the ferritic steel HT-9.

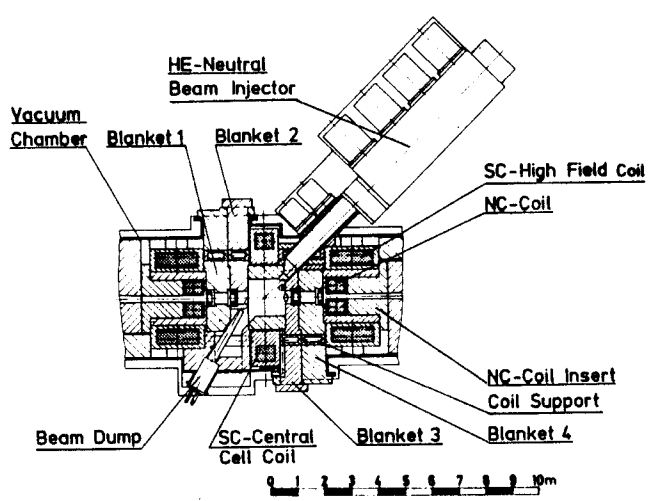

Figure 1. Plan view of central cell.

* Presently with Argonne National Laboratory.

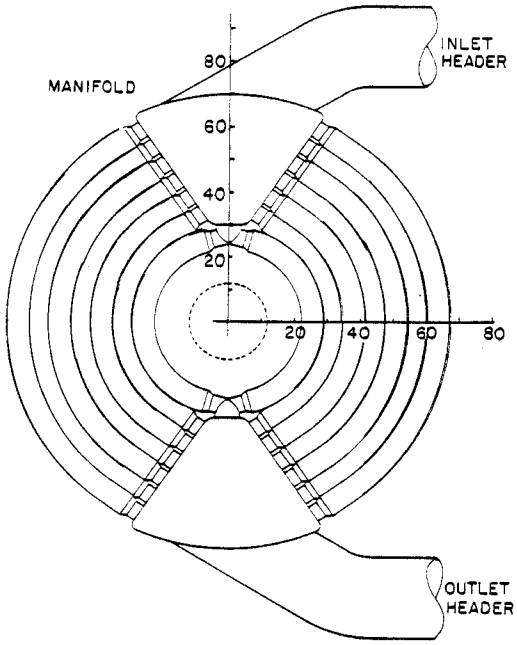

Figure 2. Plan view of LiPb blanket module.

All the tubes have an outer diameter of 7.04 cm and a wall thickness of 1.6 mm. The axial spacing from tube center to center is 7.3 cm and the radial spacing is 6.32 cm. At the point where they connect to the manifold, the tubes neck down to a diameter of 5.2 cm. This provides more space for welding on the inside of the manifold. Figure 2 shows that the first row of tubes is manifolded through a special fitting designed to supply breeding material to both sides of the tube simultaneously. This design is unique to TASKA-M and is done for several good reasons. Firstly, the small plasma radius in TASKA-M makes it very difficult to make sharp bends in the front tubes at the connection points to the manifold. Secondly, the special fitting is designed to avoid stagnation points at the flow separation and thus alleviates the probability of hot spots. Table I gives the parameters of the liquid metal blanket module both for $Li_{17}Pb_{83}$ and Li.

Figure 3 shows the liquid metal blanket module as part of the assembly used to support it and insert it into the test reactor. The assembly consists of the module, integral reflector/shield and the seal flange. Horizontal insertion is used to fit the assembly into

Table I. Parameters of Liquid Metal Blanket Modules

	LiPb	Li
First wall radius, cm	22	22
Axial extent, cm	83	83
Blanket thickness, cm	45	63.9
Number of tube rows/side	7	10
Total number of tubes	148	210
Tube outer diameter, cm	7.04	7.04
Tube inner diameter, cm	6.72	6.72
Axial tube spacing, cm	7.30	7.30
Radial tube spacing, cm	6.32	6.32
Transition section OD, cm	5.20	5.20
Transition section ID, cm	4.92	4.92
Mass of full module, tonnes	7.50	1.60
Mass of empty module, tonnes	0.54	0.94

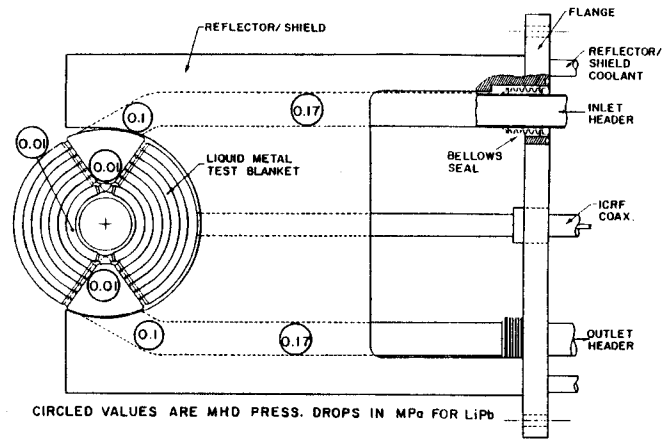

Figure 3. Liquid metal blanket module assembly.

the test reactor. The assembly flange then makes a seal to the reactor vacuum chamber. Figure 3 also shows the ICRF coaxial feed penetrating the flange through an insulating fitting.

The Li blanket module will have ten rows of tubes per side instead of seven. A completely new assembly will be needed to accommodate it. However, the space within the reactor and the components in it will not need to be modified.

ICRF Antenna Integration

Plasma heating by ICRF requires that antennas be situated within the central cell in close proximity to the plasma. One of the antennas falls within the axial span occupied by the liquid metal module. To accommodate the ICRF antenna, four of the front tubes have to be eliminated, to provide space on the sides and in the back of the antenna. Two schemes have been considered for integrating the antenna within the blanket module. In the first, the antenna is supported on a horizontal coaxial feedthrough. Although the fact that the antenna is supported on a cantilever is a drawback, a major advantage of this scheme is that the blanket module need not be removed for servicing the antenna. In the second scheme, the antenna is supported on a vertically located coaxial feedthrough. In this design the antenna is effectively suspended from the top, a very good way to support it. However, because the antenna and the blanket are interlocked, both have to be removed together. Due to uncertainties in the lifetime of the antennas due to sputtering, it was decided to go with the first support scheme.

Stresses

The blanket modules are supported on the bottom manifold with the load path going through the reflector, vacuum chamber and then to external structure supporting the central cell. In the case of the $Li_{17}Pb_{83}$ module, the total mass is ~ 7.5 tonnes. An analysis has been made to determine the stresses on the front tubes for the $Li_{17}Pb_{83}$ case. The tube was modeled as a continuous ring fixed on the bottom and built-in on rollers (capable of vertical movement) at the top. It is loaded at the top by the weight of the manifold and along its length by the mass of the tube and the breeding material.

The results are presented in Table II where the angle ϕ runs from the bottom tube connection to the top. The maximum stress occurs at the upper connection and is equal to ~ 44 MPa.

Neutronics

Neutronics analysis has been performed for the liquid metal test blankets. An average blanket volumetric composition of 73% liquid metal, 7% HT-9, and 20% void was used. The neutron wall loading has strong axial variation with peak and average values of 1.22 and 0.85 MW/m^2, respectively. The primary goal of the neutronics analysis is to design blanket test modules which have reactor relevant neutronics parameters. Local tritium breeding ratios > 1.15 and energy multiplications > 1.3 are required. Previous analysis [3] indicated that using the manganese steel Fe-1422 (14 wt.% Mn, 2 wt.% Ni and 2 wt.% Cr) as a reflector at the back of the blanket enhances the overall energy multiplication considerably. Notice that the energy multiplication is defined as the ratio of the total recoverable energy deposited in both the blanket and reflector to the fusion neutron energy of 14.1 MeV per D-T fusion. A reflector made of Fe-1422 and cooled by 5 vol.% water is used in this design.

A series of one-dimensional neutronics calculations has been performed to determine the proper enrichment and thickness for the Li and $Li_{17}Pb_{83}$ blanket test modules. The total blanket and reflector thickness was fixed at 90 cm. In the calculations, a 50 cm thick shield was used. The one-dimensional discrete ordinates code ONEDANT [4] was used to model the problem in cylindrical geometry. We used the P_3S_8 approximation with a coupled 46 neutron-21 gamma group cross section library based on the VITAMIN-C data library [5] and the MACKLIB-IV-82 response library [6]. Our results indicate that the best neutronics performance in which large values of T and M can be obtained simultaneously can be achieved when highly enriched lithium is used in $Li_{17}Pb_{83}$. On the other hand, there is no incentive for increasing the enrichment in the liquid lithium blanket beyond the natural occurrence of 7.42% ^6Li. Therefore, the liquid lithium blanket module is designed with natural lithium while the $Li_{17}Pb_{83}$ blanket utilizes lithium enriched to 90% ^6Li.

Table II. Bending and Total Stresses on the First Tube of the $Li_{17}Pb_{83}$ Module as a Function of the Angle ϕ

ϕ (degrees)	Bending Stresses (MPa)	Total Stress* on Inside Surface (MPa)	Total Stress* on Outside Surface (MPa)
0	±18.68	25.38	-11.98
15	±1.47	9.26	6.32
30	±3.03	5.07	11.13
45	±7.25	0.99	15.50
60	±10.99	-2.70	19.28
75	±14.11	-5.83	22.39
90	±16.53	-8.33	24.73
105	±18.22	-10.14	26.30
120	±19.21	-11.29	27.13
135	±19.54	-12.30	26.78
150	±19.35	-11.95	26.75
165	±18.70	-11.23	26.17
180	±37.55	-31.25	43.85

Tensile stress (+)
Compressive stress (-)

*Total stresses with the exception of thermal stresses.

Figure 4 shows the variation of the tritium breeding ratio with blanket thickness for the two modules. A blanket thickness of 63.9 cm which corresponds to ten rows of tubes was chosen for the liquid lithium module. This yields a tritium breeding ratio of 1.19. For the LiPb module a thickness of 45 cm is used with seven rows of tubes resulting in a tritum breeding ratio of 1.15. Table III gives a summary of the design parameters and tritium production results for both modules. It is clear that in the LiPb module a negligible amount of tritium is produced via the $^7Li(n,n'\alpha)t$ reaction due to the domination of the Pb(n,2n) reaction in the high energy range. On the other hand, about 44% of tritium production is contributed by ^7Li in the liquid lithium module because of its large atomic fraction.

Table IV gives the results for the nuclear heating in MeV per D-T fusion in the blanket and reflector zones of the two blanket modules. The overall energy multiplication is 1.371 in the Li blanket and 1.344 in the LiPb blanket. While 58% of the total nuclear heating is due to gamma heating in the LiPb blanket, gamma heating represents only 35% of the total heating in the Li blanket. This is due to the large gamma absorption in lead. The power per 1 m width is also given for the two blanket modules normalized to 1 MW/m^2 wall loading. For a unit wall loading the peak power density in the first wall is 6.91 W/cm^3 for the Li blanket and 6.22 W/cm^3 for the LiPb blanket.

Due to the large axial variation of the neutron wall loading along the first wall of the blanket module, the power density in the module will vary axially as well as radially. The radial variation obtained from the one-dimensional calculations was coupled with the axial variation of wall loading to get an estimate for the r and z dependence of the power

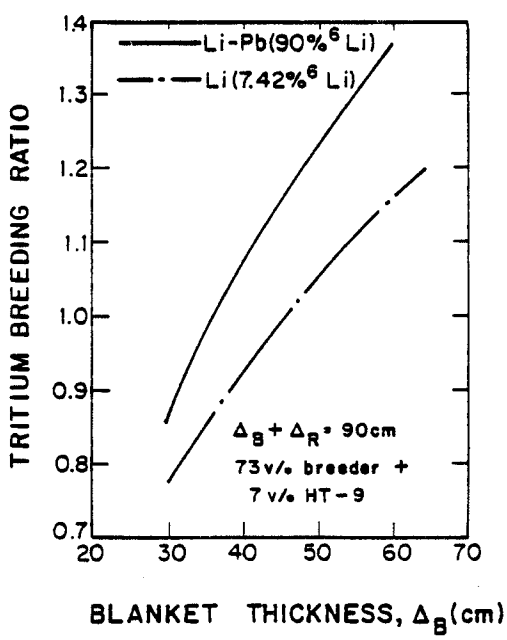

Figure 4. Variation of TBR with blanket thickness for LiPb and Li.

Table III. Comparison Between Design Parameters and Tritium Production Results for Li and Li-Pb Blanket Modules

	LiPb	Li
Lithium enrichment (% ^{6}Li)	90	7.42
Blanket thickness (cm)	45	63.9
Number of tube rows	7	10
Reflector thickness (cm)	45	26.1
Tritium breeding (Tritons/fusion)		
^{6}Li(n,α)t	1.15	0.67
^{7}Li(n,n'α)t	0.002	0.52
Total	1.15	1.19
Tritium production rate (Tritons) per unit wall loading per 1 m width	7.04×10^{17}	7.28×10^{17}

Table IV. Nuclear Heating Results for the Li and Li-Pb Blanket Modules

	LiPb	Li
Nuclear heating (MeV/fusion)		
Blanket		
Neutron	7.31	11.85
Gamma	6.41	2.95
Total	13.72	14.80
Reflector		
Neutron	0.70	0.61
Gamma	4.53	3.93
Total	5.23	4.54
Total recoverable	19.34	18.95
Energy multiplication	1.371	1.344
Power per unit width (MW/m) for 1 MW/m^2 wall loading		
Blanket	1.35	1.45
Reflector	0.51	0.45
Total	1.86	1.90

density. The power density profiles are shown for the LiPb blanket module in Fig. 5. Similar results were obtained for the Li blanket module.

Thermal Hydraulics

MHD Effects

The dominant force on a conducting fluid across magnetic field lines is the MHD force. The effect of the MHD force is to increase the pressure drop and retard heat transfer by suppressing turbulence. In a self-cooled D-T fusion reactor blanket, where the breeding material also serves as the coolant, the only severe heat transfer problem occurs at the first wall. In TASKA-M, the first wall surface heat load is < 10 W/cm^2. The effects of MHD on heat transfer are, therefore, not critical and calculations can be carried out by assuming no turbulence. The MHD pressure drop will slightly increase the stresses in the blanket and also

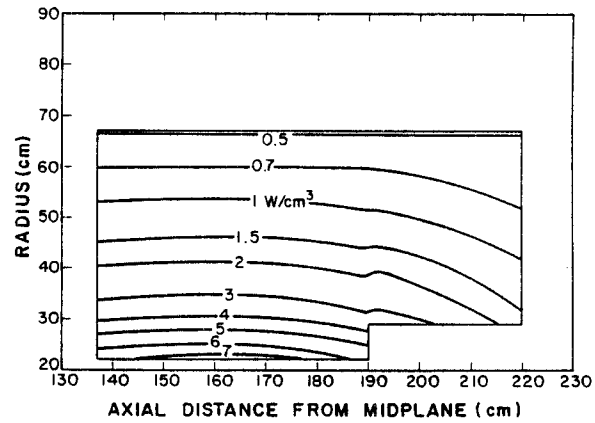

Figure 5. Power density profile for the LiPb blanket.

increase pumping power. The lower neutron wall loading in TASKA-M compared to a power reactor allows a lower coolant velocity which in turn reduces the MHD pressure drop.

It is well known that whenever an electrically conducting fluid flows across magnetic field lines, eddy currents will appear wherever curl [$\underline{v} \times \underline{B}$] is non-zero. This produces a retarding force which causes pressure drops in the fluid. Such pressure drops are classified into two categories [7], the Hartmann and end-of-loop effects.

The Hartmann pressure drop arises in fully-developed laminar flow with a uniform transverse magnetic field. The end-of-loop effects are caused by gradients of [$\underline{v} \times \underline{B}$] in the flow direction.

The MHD pressure drops for the $Li_{17}Pb_{83}$ and Li have been calculated, based on data summarized in Table V. The resulting pressure drops are shown in Fig. 2. The largest pressure drop occurs in the feed and discharge tubes due to the high local velocity. This pressure drop has been reduced by the use of a laminated tube, with a 1 mm thick sleeve, which is electrically insulated from the main structural tube. The thin inner sleeve reduces the Hartmann pressure drop by reducing the eddy currents. The total MHD pressure drop in the reactor is 0.57 MPa, which corresponds to a pumping power requirement of 2.3 kW. The maximum blanket pressure is 0.42 MPa. This value is smaller than the total MHD pressure drop because much of the drop occurs in the exit header. The important blanket parameters are summarized in Table V.

Heat Transfer Calculations

The temperature profile in the coolant tube can be calculated by assuming only conduction. This can be justified due to MHD suppression of turbulence. The most severe heat transfer problems occur in the first row of tubes. The energy deposited in the first row of tubes consists of a volumetric component due to nuclear heating and a surface heating load from the plasma. A slab geometry with a constant velocity, constant surface heat flux and exponential volumetric heat flux was used to calculate the temperature profile. The first wall is subjected to a relatively large surface heating from the plasma and, consequently, has a more severe heat transfer problem. A simplified equation is used to calculate the first wall temperature,

Table V. Liquid Testing Module Parameters

	LiPb	Li
Average wall loading, MW/m^2	0.84	0.84
Peak wall loading, MW/m^2	1.22	1.22
Energy production rate, MW/m / MW/m^2	1.35	1.45
Module width, m	0.83	0.83
Inner/outer radius, cm	22/67	22/85
Breeder/coolant	LiPb	Li
Local tritium breeding ratio	1.15	1.19
Blanket energy production, MW	0.95	1.02
Reflector energy production, MW	0.36	0.32
Magnetic field, tesla	4.2	4.2
Module neutron power, MW	0.96	0.96
Tritium production rate, g/d	0.21	0.22

$$T_o - T_{in} = 3.4\ t + 22.4\ t^{1/2}$$

where t is the residence time of the coolant in the blanket and is equal to 27.6 s at the exit, and T_o is 512°C. This is high but judged to be acceptable. Important thermal hydraulic parameters are given in Table VI.

Conclusion

A liquid metal self-cooled tubular blanket design appears to be suitable for testing in a tandem mirror test reactor such as TASKA-M. It meets all the structural, thermal hydraulic and neutronic requirements which could qualify it for use in a fusion power reactor.

Acknowledgment

This research has been supported by Kernforschungszentrum, Karlsruhe, Federal Republic of Germany.

References

[1] B. Badger et al., "WITAMIR-I, A University of Wisconsin Tandem Mirror Reactor Design," University of Wisconsin Fusion Engineering Program UWFDM-400 (Sept. 1980).

Table VI. Liquid Metal Testing Module Thermal - Hydraulic Parameters

	LiPb	Li
Blanket power, MW	0.95	1.02
Blanket coolant	LiPb	Li
Coolant temperature, °C	300/450	300/450
Coolant flow rate, kg/hr	1.37×10^5	5.8×10^3
Maximum structural temp., °C	512	500
Maximum coolant velocity, cm/s	2.5	1.8
MHD pressure drop (MPa)	0.57	0.45
Maximum blanket pressure (MPa)	0.42	0.35
Pumping power, kW	2.3	1.4
Reflector power, MW	0.36	0.32
Reflector coolant	H_2O	H_2O
Coolant temperature, °C	80/150	80/150
Coolant flow rate, kg/hr	735	653

[2] B. Badger, W. Heinz, et al., "TASKA - Tandem Spiegelmaschine Karlsruhe, A Tandem Mirror Fusion Engineering Test Facility," University of Wisconsin Fusion Engineering Program Report UWFDM-500, KfK-3311, FPA-82-1 (March 1982).

[3] J.H. Huang and M.E. Sawan, "Neutronics Analysis for the MARS Li-Pb Blanket and Shield," Nucl. Technology/Fusion, vol. 4/2/3, pp. 835 (1983).

[4] R. O'Dell, F. Brinkley, Jr., and D. Marr, "User's Manual for ONEDANT: A Code Package for One-Dimensional Diffusion-Accelerated, Neutral-Particle Transport," Los Alamos National Laboratory, LA-9184-M (1982).

[5] "VITAMIN-C, 171 Neutron, 36 Gamma-Ray Group Cross Section Library in AMPX Interface Format for Fusion Neutronics Studies," DLC-41B, RSIC Data Library, Oak Ridge National Laboratory (1977).

[6] "MACKLIB-IV, 171 Neutron, 36 Gamma-Ray Group Kerma Factor Library," DLC-60B, RSIC Data Library, Oak Ridge National Laboratory (1982).

[7] M.A. Hoffman and G.A. Carlson, "Calculation Techniques for Estimating the Pressure Losses for Conducting Flows in Magnetic Fields," USAEC Report UCAL-51010, 1971.